iSONIC WAVE KSE

Ultrasonic sealing system
for head sealing seams of stand-up and flat bags

SONOTRONIC
ULTRASONICS TECHNOLOGY

iSONIC WAVE KSE

Head sealing unit

Ultrasonic system for head sealing seams in upright and flat bags

SONOTRONIC now supplies, as a supplement, mechanical sealing tongs for the pure ultrasonic components for free head sealing of upright and flat bags.

Pneumatic features

The iSONIC WAVE KSE head sealing unit has been specially adapted for the mechanical requirements of an ultrasonic sealing system. As a closed all-in system the head sealing unit can easily be integrated into existing or new bag filling systems, thus enabling manufacturers of packaging machines to convert to sustainable ultrasonic technology with one complete solution and use the whole spectrum of advantages ultrasonic technology provides.

No disturbing contours in the sealing area

In order to meet the parallelism requirements the ultrasonic system and the sealing anvil are mounted on a common continuous guidance system. This guidance system is arranged in a second plane above the tools so that the sealing area is completely free of additional disturbing contours.

Maximum sealing width

Because of the two-plane design the width of the mechanical sealing tongs is also equal to the maximum sealing width. In addition, the main body of the tongs has been designed specifically to meet the requirements regarding bending strength and guidance accuracy of an ultrasonic sealing system.

Advantages

- Ultrasonic tools and sealing tongs in one unit
- Modular sonotrodes in 20, 30 or 35 kHz technology can be used
- Common guidance system comprising the oscillating structure and anvil
- Sealing strength specifically adjustable
- Disturbing contours above tool level (not in the sealing area)
- Speed profile, stroke and retention time-specifically adjustable
- High guidance accuracy by means of recirculating roller guide
- High sealing forces to avoid film displacement in the sealing process
- Equipped with customer-specific servo drives

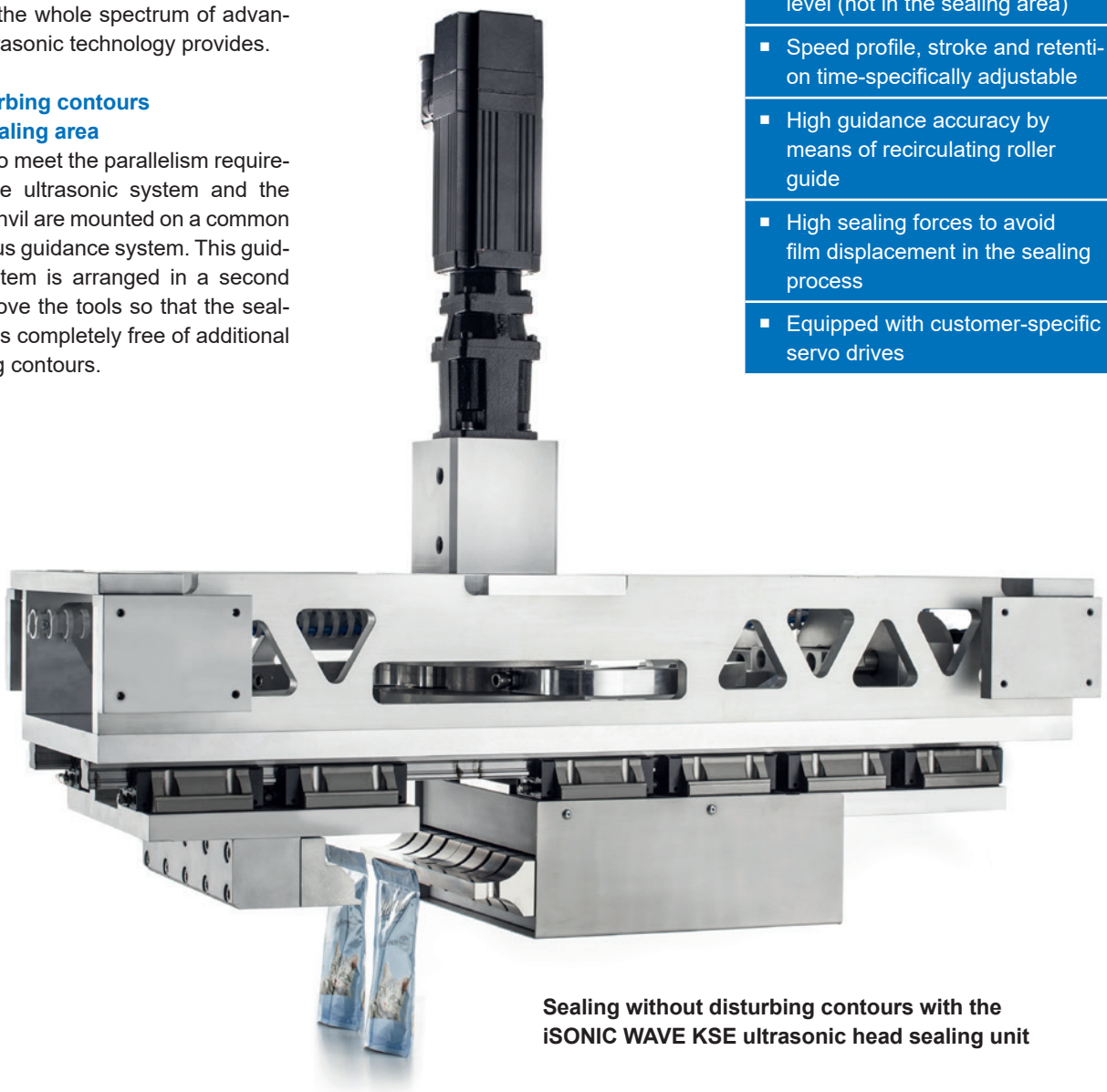

Sealing without disturbing contours with the iSONIC WAVE KSE ultrasonic head sealing unit

Technical data

Simple integration in existing or new machine concepts

Infos online

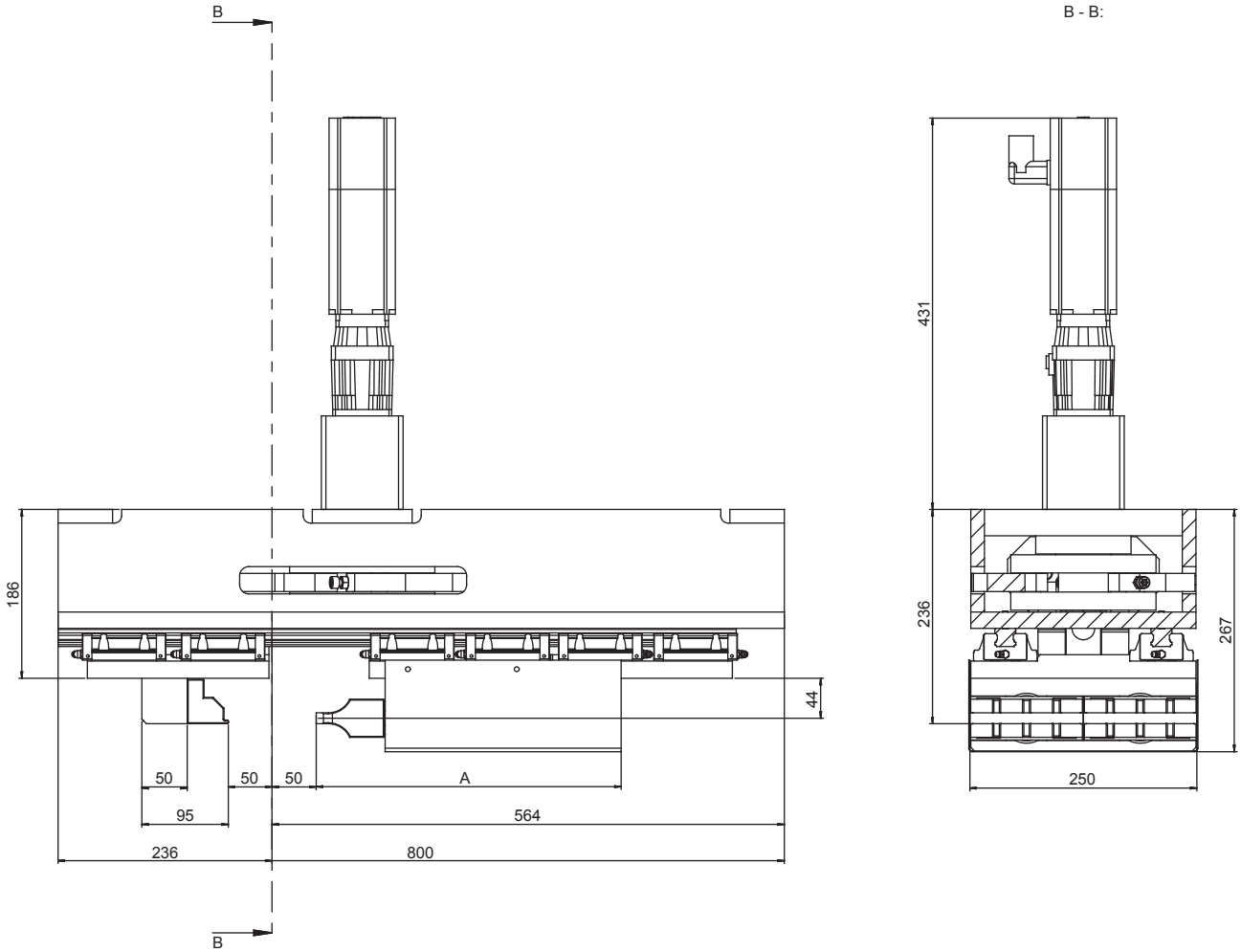

Customer-specific adaptations

The maximum stroke, speed profile and retention time of the head sealing unit can be freely reduced to the specific requirements by means of the servo drive. The servo drive itself is mounted in the vertical axis above the guidance system. The servo drive is coupled to the guidance system by means of crank mechanics with automatic tumbler in the sealing position.

The head sealing unit can be mounted customer-specifically, for example over the guide rails at the top or bottom, or is also available with a stand foot housing integrating the servo control.

Technical data	
Maximum sealing width [mm]	250
Max. stroke [mm]	2 x 50
Max. closing force [N]	2.000
Number of cycles (cycles/min) at max. stroke	50
Max. air pressure [bars]	6
Electrical connected loads	3 x 400 V+N+PE 50 Hz
Reach on anvil side [mm]	95
Reach of sonotrode side (A) [mm] at 35 kHz	336
Dimensions of sealing tongs WxHxT [mm]	250 x 800 x 186
Sealing tong housing WxHxT [mm]	250 x 800 x 700

Infos online

Quality testing of sealed seams

Optimum sealing results based on laboratory analyses

The choice of ultrasonic frequency, the geometry of the sealing tools and the properties of the bag material play a decisive role in the development of ultrasonic systems for sealed head seams. For quality assurance we carry out comprehensive seam tests in our packaging laboratory.

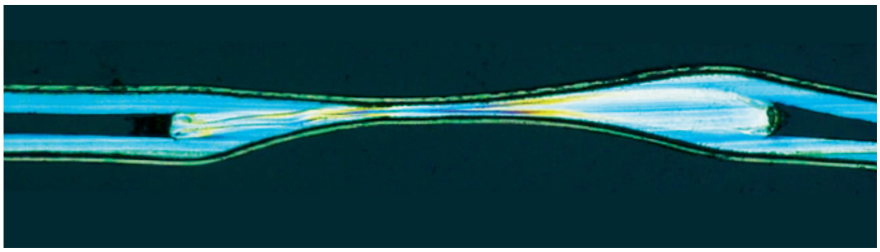

Analysis of the tightness of the sealed seam

The melting behaviour of the foil laminates' seal layers are observed on the basis of microtome sections from the sealed seam area. This enables conclusions to be drawn on the tightness of the seam.

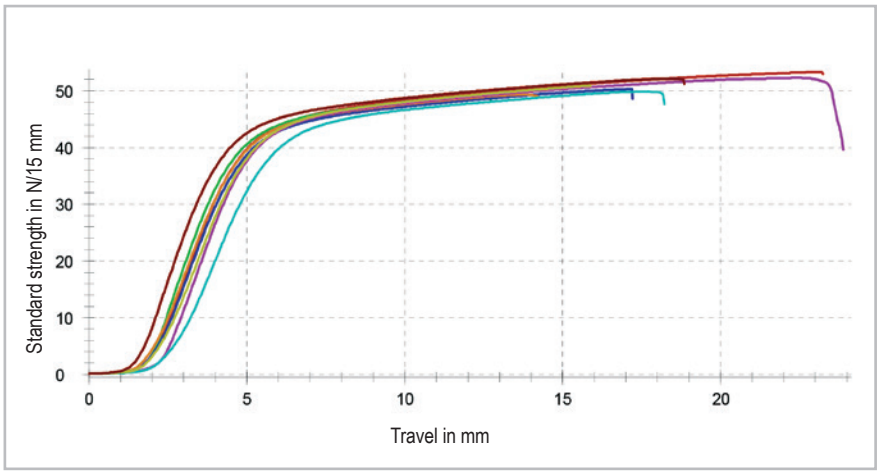

Analysis of the strength of the sealed seam

We test the sealed seam strength of the bag in the laboratory by means of a ensile strength test. Several samples are compared with each other and the results documented.

The measures we take to adjust the sealed head seam perfectly to the relevant application are derived from the results of the analyses. This is how we achieve absolutely solid, leak-tight sealed seams for stand-up and flat bags.

03-2025 © SONOTRONIC GmbH • Subject to change.

SONOTRONIC
ULTRASONICS TECHNOLOGY

SONOTRONIC GmbH
Headquarters
Becker-Göring-Straße 17-25
76307 Karlsbad, Germany
Tel.: +49 7248 9166-0
Fax: +49 7248 9166-144
info@sonotronic.de
www.sonotronic.de

SONOTRONIC, Inc.
Branch USA
46425 Peary Ct.
Wixom, MI 48377, USA
Phone: +1 248 987 5970
Fax: +1 248 987 5964
info@sonotronic.com
www.sonotronic.com

V-Card

V-Card

Linked with success.

Industry solutions
- Automotive
- Plastics
- Packaging & Food
- Technical Textiles
- Environmental

Products
- Special machines
- Standard machines
- Ultrasonic systems
- Ultrasonic components

Technologies
- Ultrasonic
- Infrared
- Hot plate
- Hot air